Depliant
C100/1119

de pala
Italian OEM Technology

MOTORIZED BALL VALVES WITH ISO CONNECTION

2 AND 3 WAYS DN 15 ÷ DN 100 ISO 228-1 THREADED AND FLANGED

The **valves**, ready to be motorized, are made in **nickel plated brass**, according to criteria of robustness and reliability. The ball shutter guarantees **minimum loss of pressure** and **no leakages**. The 3 ways can be chosen in **frontal or coplanar** configurations to fit in many plants' layout.

The **servomotors** have heat treated **steel gears** and are available in a **large range** with different technical features.

The **spacers** are made in **stainless steel** and are necessary when the body valve must be **insulated**; moreover when the spacer is used, the servomotor is more protected against the temperature of the conveyed fluid. The spacer with lever allows to disengage the servomotor and to **drive manually** the body valve.

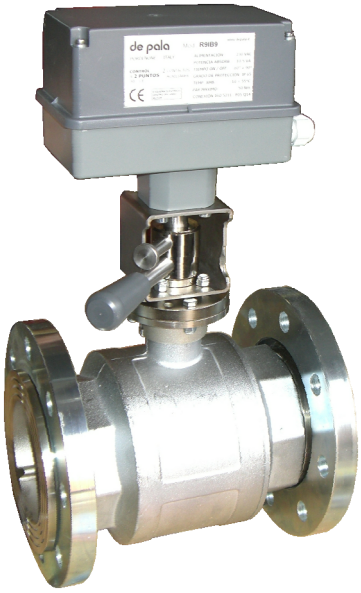

BODY VALVE FEATURES	
Body valve	nickel-plated brass CW617N
Ball	chromium plated brass
Maximum operating pressure	from 16 to 40 bar
Maximum differential pressure	6 bar
Fluid temperature range	-10 °C + 100 °C
Connection flange to servomotor	standard ISO 5211
Total flow and no leakages PTFE seats Rod in brass CW614N with double o-ring in EPDM Compatible fluids: water or fluids compatible with PTFE and EPDM **Not intended for use with steam or partialisation**	

SERVOMOTORS FEATURES	
Supply voltage	230 or 24 Vac
Control type	2 or 3 wires
Static torque	from 12 to 50 Nm
Elettric protection rating	up to IP65
Operation time	60" x 90°
Bidirectional rotation With auxiliary switches 12 or 24 Vdc available	

THREADED

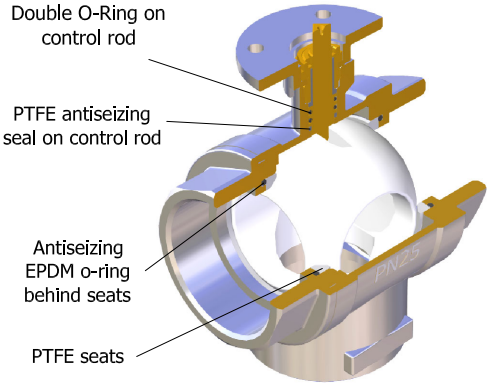

Female thread ISO 228-1

FLANGED

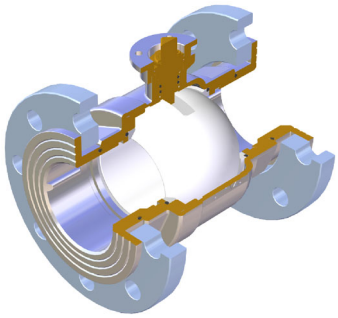

Free flanges EN 1092-1 (PN 16)

SPACERS	
Height	from 42 to 76 mm
Types	**Simple** or **with lever** for manual override
Stainless steel lever and rod. With lever type, the servomotor can be disengaged by a threaded pin to drive manually the body valve.	

Simple spacer

Spacer with lever

2 WAYS VALVE

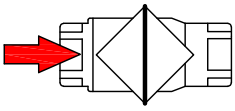

CLOSED POSITION

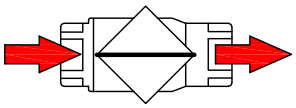

OPEN POSITION

THREADED

FEMALE CONNECTIONS ISO 228-1

	BODY VALVES CODES								
	632 FI	**602 FI**	**612 FI**	**622 FI**	**642 FI**	**652 FI**	**662 FI**	**672 FI**	**682 FI**
DN	**15**	**20**	**25**	**32**	**40**	**50**	**65**	**80**	**100**
CONNECTIONS	**1/2"**	**3/4"**	**1"**	**1" 1/4**	**1" 1/2**	**2"**	**2" 1/2**	**3"**	**4"**
F	56	68	78	90	100	115	141	159	195
H1	48	52	56	68	73	79	92	102	129
H2	160	164	168	205	210	216	235	245	272
H3	180	184	188	295	300	306	325	335	362
A	8			10			12		18
TORQUE	4 Nm		5 Nm		6 Nm	7 Nm	15 Nm	18 Nm	
PN	40 bar							25 bar	16 bar
FLANGE	F03 □ 9			F05 □ 11			F05 □ 14		F07 □ 14
SERVOMOTORS	**M7 / R7 / P7 / T7** 12 Nm			**M8 / R8** 20 Nm			**M9 / R9** 50 Nm		

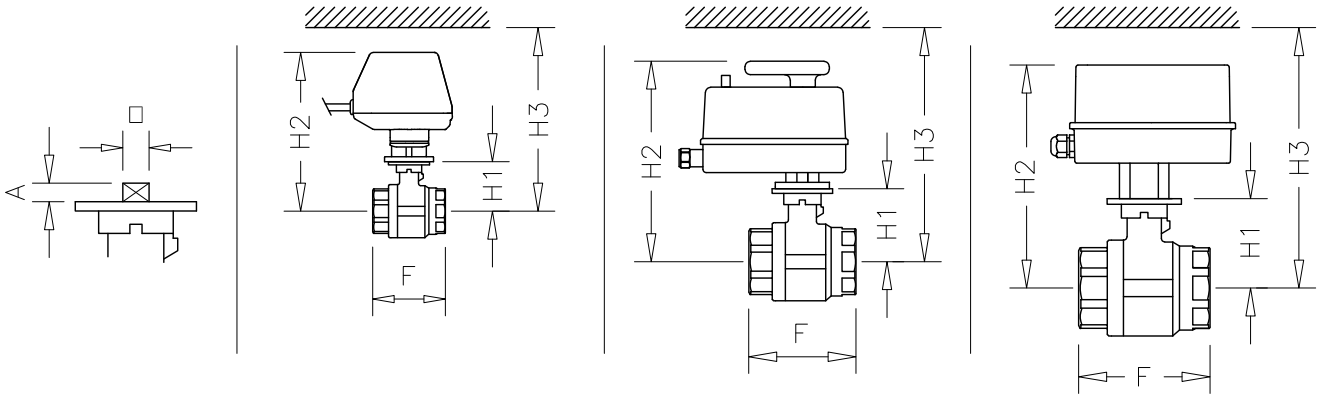

FLANGED

FREE FLANGES EN1092-1 PN16

	BODYS VALVES CODES				
	642 FL	**652 FL**	**662 FL**	**672 FL**	**682 FL**
DN	**40**	**50**	**65**	**80**	**100**
F	146	167	190	214	254
H1	114	131	92	103	127
H2	251	268	235	246	270
H3	341	358	325	336	360
A	10	10	14	14	17
D1	Ø150	Ø165	Ø185	Ø200	Ø220
D2	Ø110	Ø125	Ø145	Ø160	Ø180
TORQUE	6 Nm	7 Nm	15 Nm	18 Nm	
PN	16 bar				
FLANGE	F05 □ 11		F05 □ 14		F07 □ 14
SERVOMOTORS	**M8 / R8** 20 Nm		**M9 / R9** 50 Nm		

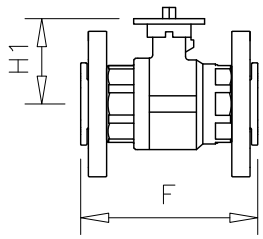

Not indicated dimensions are the same of threaded one

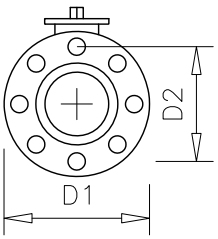

flanges DN 40 - DN 50 - DN 65
n° 4 holes for M16

flanges DN 80 - DN 100
n° 8 holes for M16

MOTOR CONNENCTION FLANGE ISO 5211

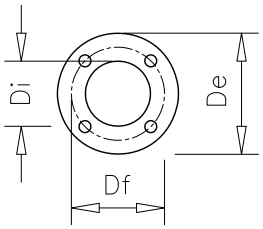

	F03	F05	F07
Di	Ø25	Ø35	Ø55
De	Ø50	Ø65	Ø90
Df	Ø36	Ø50	Ø70
Holes	Ø5.5	Ø6.5	Ø8.5

PRESSURE DROPS

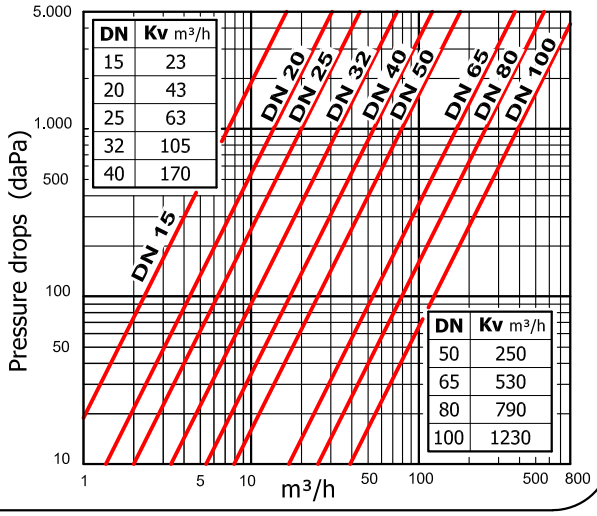

3 WAYS COPLANAR DEVIATING "T" BORED VALVE

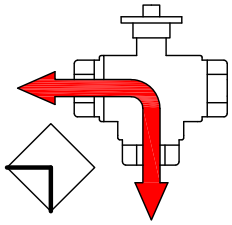

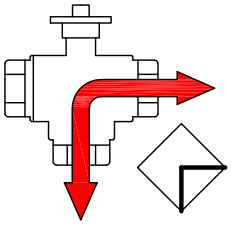

THREADED

FEMALE CONNECTIONS ISO 228-1

	BODY VALVES CODES						
	633 TI	**603 TI**	**613 TI**	**623 TI**	**643 TI**	**653 TI**	**673 TI**
DN	**15**	**20**	**25**	**32**	**40**	**50**	**80**
CONNECTIONS	**1/2"**	**3/4"**	**1"**	**1" 1/4**	**1" 1/2**	**2"**	**3"**
F	56	68	78	90	100	115	180
P	30	34	41	47	53	62	114
H1	48	52	56	68	73	79	104
H2	160	164	168	205	210	216	247
H3	180	184	188	295	300	306	337
A	8			10			12
TORQUE	4 Nm		5 Nm		6 Nm	7 Nm	18 Nm
PN	25 bar						
FLANGE	F03 □ 9			F05 □ 11			F05 □ 14
SERVOMOTORS	**M7 / R7 / P7 / T7** 12 Nm			**M8 / R8** 20 Nm			**M9 / R9** 50 Nm

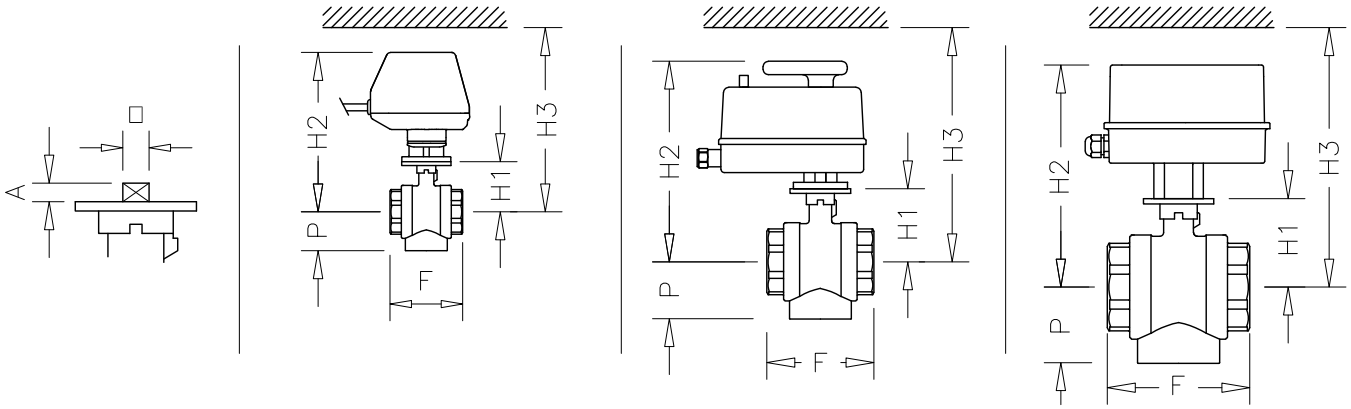

FLANGED

FREE FLANGES EN1092-1 PN16

	BODY BALVES CODES
	673 FT
DN	**80**
F	235
H1	104
P	140
H2	247
H3	337
A	12
D1	Ø200
D2	Ø160
TORQUE	18 Nm
PN	16 bar
FLANGE	F05 □ 14
SERVOMOTORS	**M9 / R9** 50 Nm

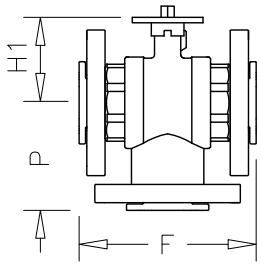

Not indicated dimensions are the same of the threaded ones

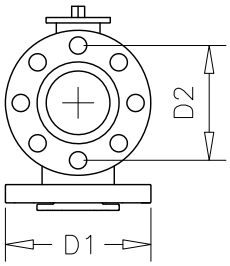

flanges DN 80 - DN 100 n° 8 holes for M16

MOTOR CONNENCTION FLANGE ISO 5211

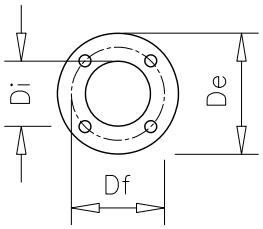

	F03	F05
Di	Ø25	Ø35
De	Ø50	Ø65
Df	Ø36	Ø50
Holes	Ø5.5	Ø6.5

PRESSURE DROPS

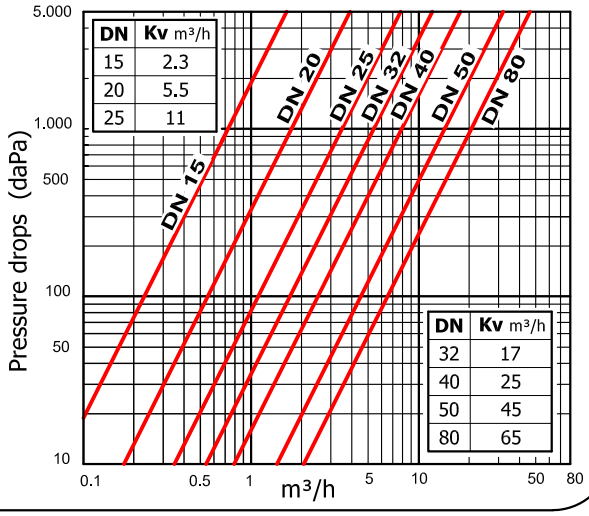

3 WAYS FRONTAL DEVIATING "L" BORED VALVE

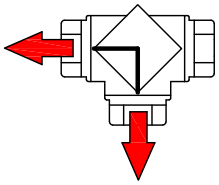

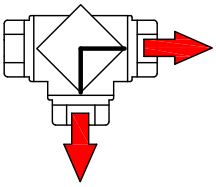

THREADED

FEMALE CONNECTIONS ISO 228-1

	BODY VALVES CODES						
	63A LI	**60A LI**	**61A LI**	**62A LI**	**64A LI**	**65A LI**	**66A LI**
DN	**15**	**20**	**25**	**32**	**40**	**50**	**65**
CONNECTIONS	**1/2"**	**3/4"**	**1"**	**1" 1/4**	**1" 1/2**	**2"**	**2" 1/2**
F	82	90	106	120	142	165	194
H1	51	54	63	67	73	80	91
H2	163	166	200	204	210	217	234
H3	183	186	290	294	300	307	324
A	8		10		12		
TORQUE	4 Nm		5 Nm	6 Nm	8 Nm	9 Nm	12 Nm
PN	40 bar						
FLANGE	F03 □ 9		F05 □ 11				F05 □ 14
SERVOMOTORS	**M7 / R7 ...** 12 Nm		**M8 / R8** 20 Nm				**M9 / R9** 50 Nm

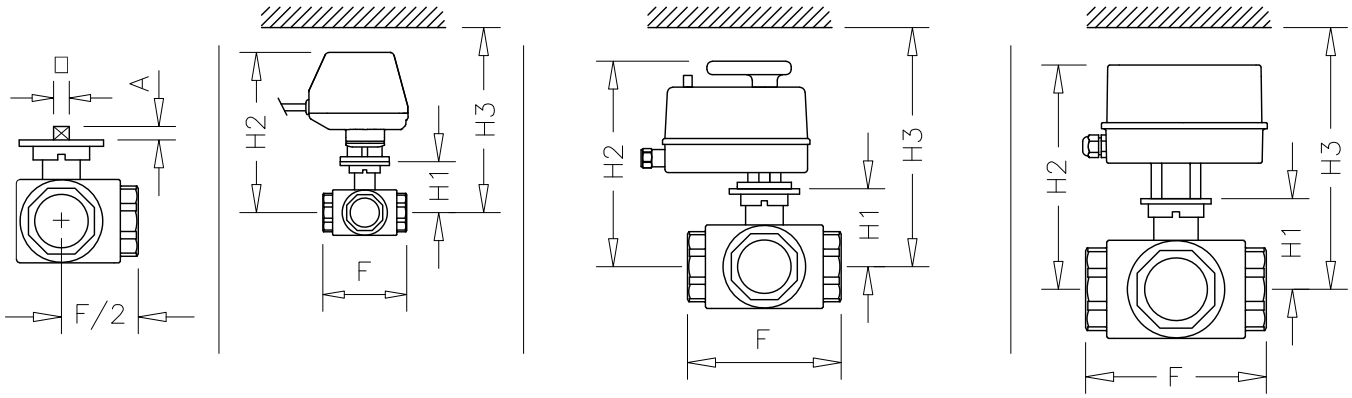

FLANGED

FREE FLANGES EN1092-1 PN16

	BODY VALVES CODES		
	643 FF	**653 FF**	**663 FF**
DN	**40**	**50**	**65**
F	187	215	241
G	116	108	121
H1	73	80	91
H2	210	217	234
H3	300	307	324
A	12		
D1	Ø150	Ø165	Ø185
D2	Ø110	Ø125	Ø145
TORQUE	8 Nm	9 Nm	12 Nm
PN	16 bar		
FLANGE	F05 □ 11		F05 □ 14
SERVOMOTORS	**M8 / R8** 20 Nm		**M9 / R9**

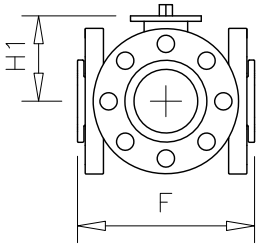

Not indicated dimensions are the same of the threaded ones

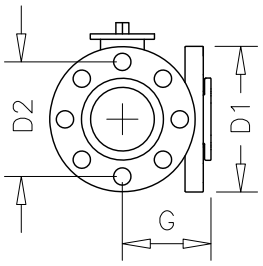

flanges DN 40 - DN 50 - DN 65 n° 4 holes for M16

MOTOR CONNENCTION FLANGE ISO 5211

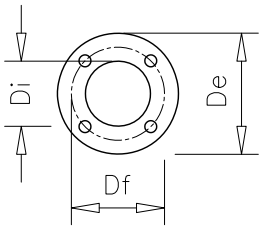

	F03	F05
Di	Ø25	Ø35
De	Ø50	Ø65
Df	Ø36	Ø50
Holes	Ø5.5	Ø6.5

PRESSURE DROPS

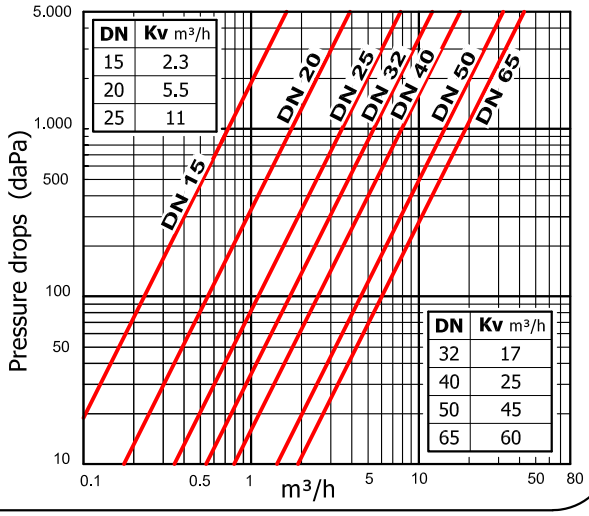

3 WAYS FRONTAL LATERAL DEVIATING VALVE

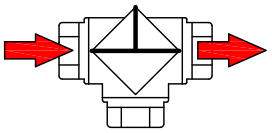

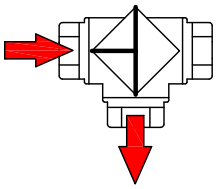

THREADED

FEMALE ISO 228-1

	BODY VALVES CODES						
	63A TI	**60A TI**	**61A TI**	**62A TI**	**64A TI**	**65A TI**	**66A TI**
DN	**15**	**20**	**25**	**32**	**40**	**50**	**65**
CONNECTIONS	**1/2"**	**3/4"**	**1"**	**1" 1/4**	**1" 1/2**	**2"**	**2" 1/2**
F	82	90	106	120	142	165	194
H1	51	54	63	67	73	80	91
H2	163	166	200	204	210	217	234
H3	183	186	290	294	300	307	324
A	8		10		12		
TORQUE	4 Nm		5 Nm	6 Nm	8 Nm	9 Nm	12 Nm
PN	40 bar						
FLANGE	F03 □9		F05 □11				F05 □14
SERVOMOTORS	**M7 / R7 ...** 12 Nm		**M8 / R8** 20 Nm				**M9 / R9** 50 Nm

CONNENCTION FLANGE ISO 5211

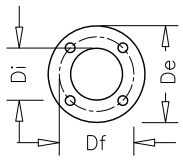

	F03	F05
Di	Ø25	Ø35
De	Ø50	Ø65
Df	Ø36	Ø50
Holes	Ø5.5	Ø6.5

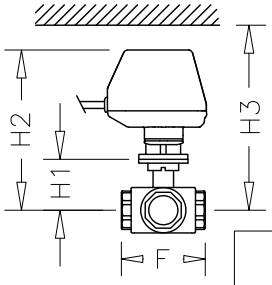

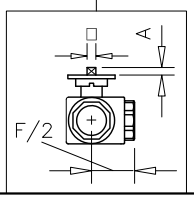

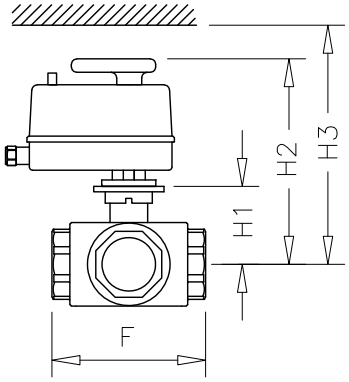

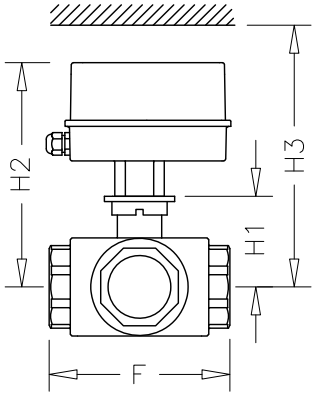

FLANGED

FREE FLANGES EN1092-1 PN16

	BODY VALVES CODES		
	643 FD	**653 FD**	**663 FD**
DN	**40**	**50**	**65**
F	187	215	241
G	116	108	121
H1	73	80	91
H2	210	217	234
H3	300	307	324
A	12		
D1	Ø150	Ø165	Ø185
D2	Ø110	Ø125	Ø145
TORQUE	8 Nm	9 Nm	12 Nm
PN	16 bar		
FLANGE	F05 □11		F05 □14
SERVOMOTORS	**M8 / R8** 20 Nm		**M9 / R9**

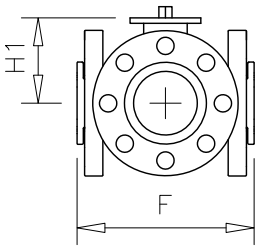

Not indicated dimensions are the same of threaded ones

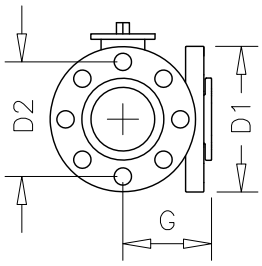

flanges DN 40 - DN 50 - DN 65 n° 4 holes for M16

PRESSURE DROPS

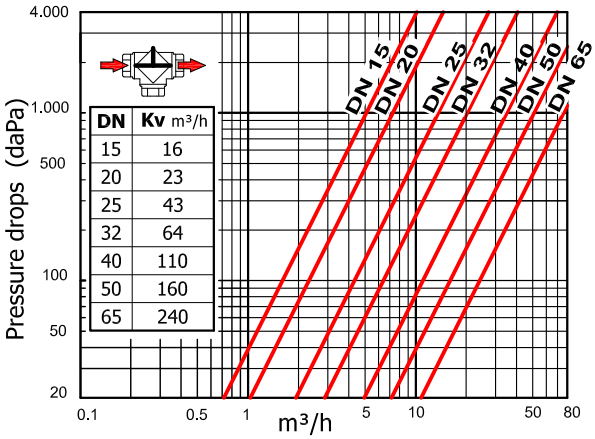

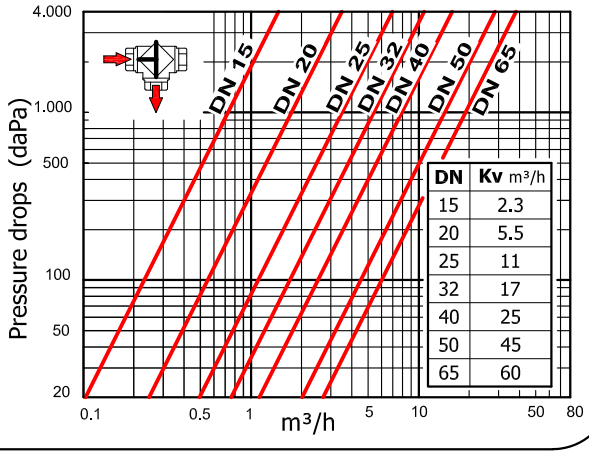

SERVOMOTORS

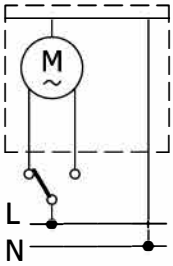

3 WIRES

Each control commands one servomotor only

BIDIRECTIONAL

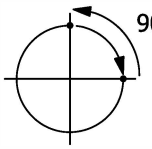

2 WIRES

(relay inside)

Each control can command multiple servomotors

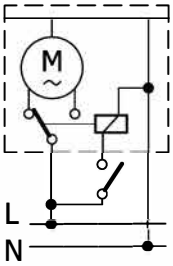

M7 / R7 / ...

	SERVOMOTORS CODES							
	M7IB9	**P7IB9**	**R7IB9**	**T7IB9**	**M7IC9**	**P7IC9**	**R7IC9**	**T7IC9**
POWER SUPPLY	**230 Vac** +/- 10%				**24 Vac** +/- 10%			
CONTROL	**3 Wires**		**2 Wires**		**3 Wires**		**2 Wires**	
ELETTRIC PROTECTION	IP 54	IP 65	IP 54	IP 65	IP 54	IP 65	IP 54	IP 65

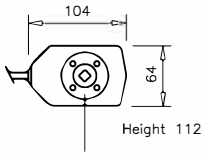

Flange F03 □ 9

Operation time: 60" x 90° bidirectional
Static torque: 12 Nm
Auxiliary switch: n° 1, max. 6 (2) A - 250 Vac (contact closed with valve open)
Operating temperature: 0 ÷ + 65 °C
Power consumption: 4 W only during rotation
Flange ISO 5211: F03 □ 9

Prewired cable

Coloured position indicator

12 Nm

M8 / R8

	SERVOMOTORS CODES							
	M8IB9	**M8IB9P**	**R8IB9**	**R8IB9P**	**M8IC9**	**M8IC9P**	**R8IC9**	**R8IC9P**
POWER SUPPLY	**230 Vac** +/- 10%				**24 Vac** +/- 10%			
CONTROL	**3 Wires**		**2 Wires**		**3 Wires**		**2 Wires**	
ELETTRIC PROTECTION	IP 42	IP 65	IP 42	IP 65	IP 42	IP 65	IP 42	IP 65

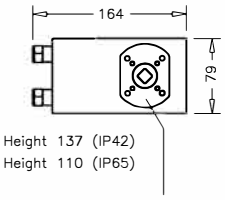

Flange F03 - F05 □ 11

Operation time: 60" x 90° bidirectional
Static torque: 20 Nm
Aux. switch * n° 1, max. 16 (6) A - 250 Vac (contact closed with valve open)
Operating temperature: - 10 ÷ + 55 °C
Power consumption: 4.5 W only during rotation
Flange ISO 5211: F03 - F05 □ 11

*** With E instead of B = 2 aux. switches** e.g. M8IE9	*** With F instead of C = 2 aux. switches** e.g. M8IF9

Position indicator and lever for manual override

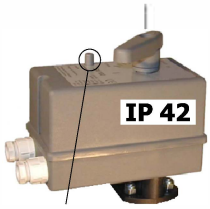

Button for manual override

20 Nm

M9 / R9

	SERVOMOTORS CODES			
	M9IB9	**R9IB9**	**M9IC9**	**R9IC9**
POWER SUPPLY	**230 Vac** +/- 10%		**24 Vac** +/- 10%	
CONTROL	**3 Wires**	**2 Wires**	**3 Wires**	**2 Wires**
ELETTRIC PROTECTION	IP 65			

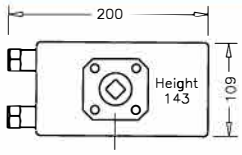

Flange F05 □ 14

Operation time: 60" x 90° bidirectional
Static torque: 50 Nm
Auxiliary switches: n° 2, max. 16 (6) A - 250 Vac
Operating temperature: - 10 ÷ + 55 °C
Power consumption: 10.5 W only during rotation
Flange ISO 5211: F05 □ 14

Position indicator

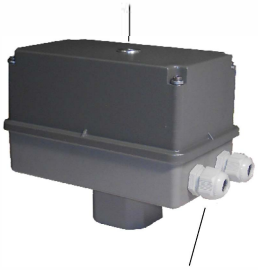

Terminal board connection

50 Nm

SPACERS

SIMPLE

DN	15	20	25
CONNECTIONS	1/2"	3/4"	1"
F	56	68	78
P	-	-	-
H1	90	94	98
H2	202	206	210
H3	222	226	230

15	20	25
1/2"	3/4"	1"
56	68	78
30	34	41
90	94	98
202	206	210
222	226	230

15	20
1/2"	3/4"
82	90
-	-
93	96
205	208
225	228

H 42 mm
COD. **K3S7**

2 WAYS

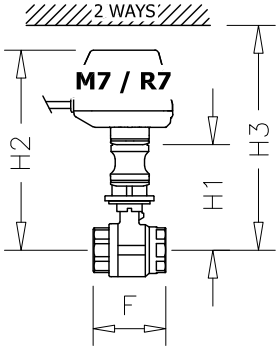

3 WAYS COPLANAR

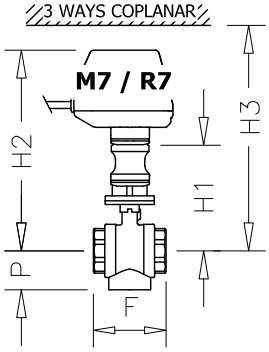

3 WAYS FRONTAL

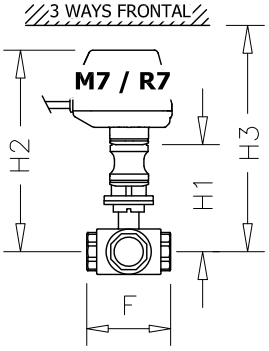

LEVER

DN	15	20	25
CONNECTIONS	1/2"	3/4"	1"
F	56	68	78
P	-	-	-
H1	124	128	132
H2	236	240	244
H3	256	260	264

15	20	25
1/2"	3/4"	1"
56	68	78
30	34	41
124	128	132
236	240	244
256	260	264

15	20
1/2"	3/4"
82	90
-	-
127	130
239	242
259	262

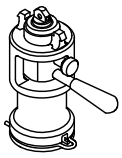

H 76 mm
COD. **K3M7**

2 WAYS

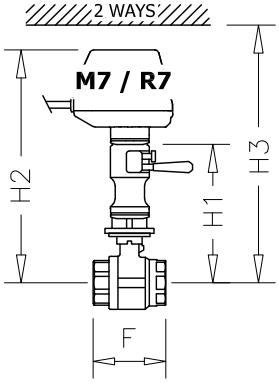

3 WAYS COPLANAR

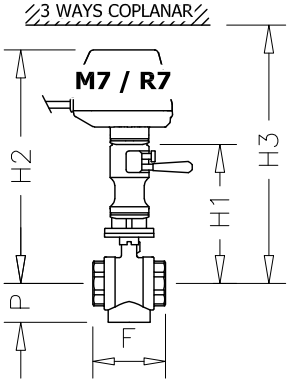

3 WAYS FRONTAL

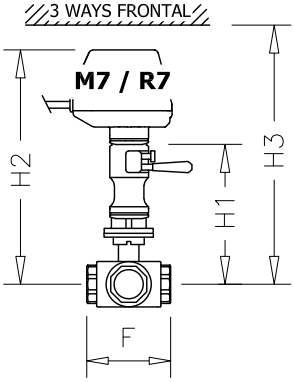

SIMPLE

DN	32	40	50
CONNECTIONS	1" 1/4	1" 1/2	2"
F	90	100	115
P	-	-	-
H1	138	143	149
H2	248	253	259
H3	338	343	349

32	40	50
1" 1/4	1" 1/2	2"
90	100	115
47	53	62
138	143	149
248	253	259
338	343	349

25	32	40	50
1"	1" 1/4	1" 1/2	2"
106	120	142	165
-	-	-	-
133	137	143	150
243	247	253	260
333	337	343	350

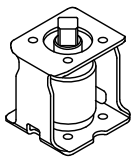

H 70 mm
COD. **K8I51**

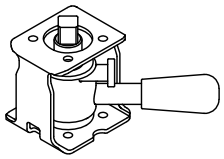

H 70 mm
COD. **DMI51**

THREADED VALVES DIMENSIONS

2 WAYS

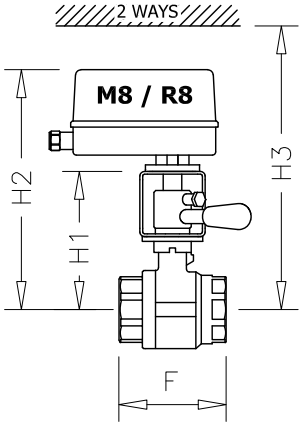

3 WAYS COPLANAR

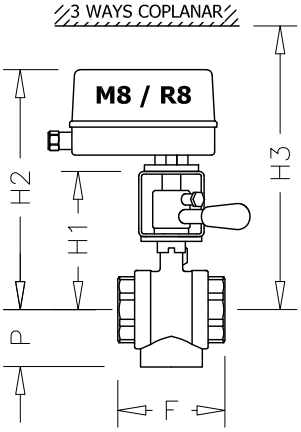

3 WAYS FRONTAL

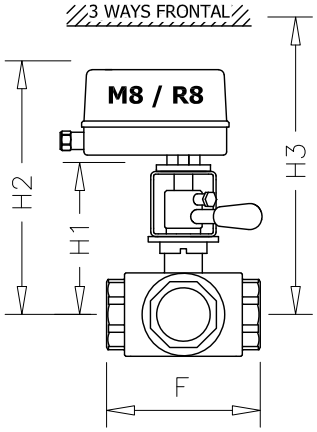

LEVER

FLANGED VALVES DIMENSIONS

DN	40	50
F	146	167
H1	184	201
H2	294	311
H3	384	401

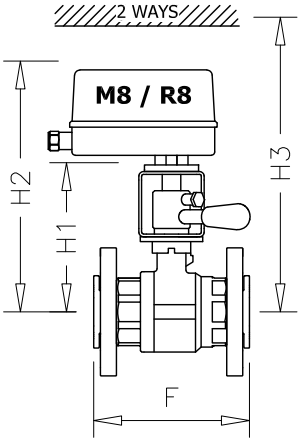

DN	40	50
F	187	215
H1	143	150
H2	253	260
H3	343	350

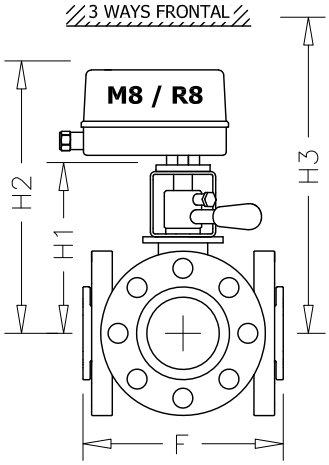

SIMPLE

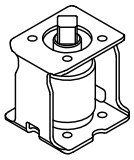

H 70 mm
COD. **K9I54**

DN	65	80	100
CONNECTIONS	2" 1/2	3"	4"
F	141	159	195
H1	162	172	199
H2	305	315	342
H3	395	405	432

THREADED VALVE DIMENSION

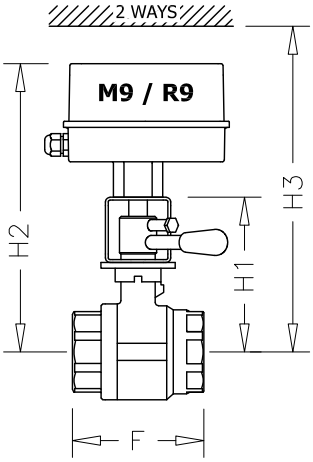

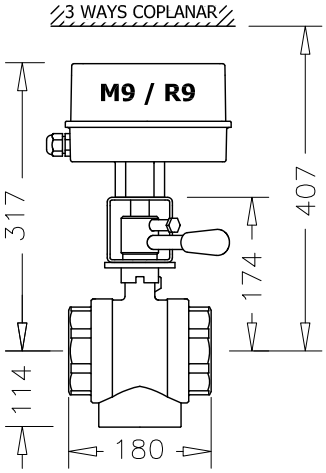

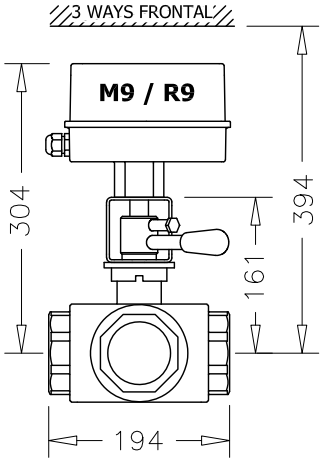

MANUAL OVERRIDE CAN BE USED AS FLOW INDICATOR
(e.g. 2 ways valve)

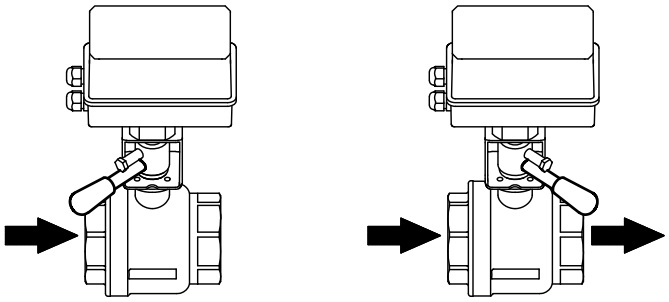

DN	65	80	100
F	190	214	254
H1	162	173	197
H2	305	316	340
H3	395	406	430

FLANGED VALVES DIMENSION

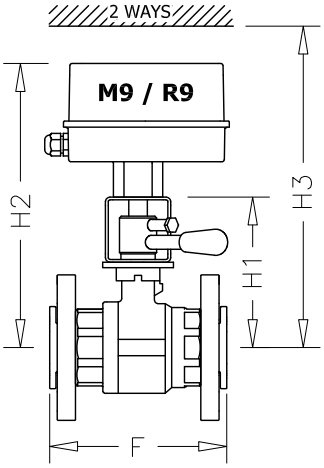

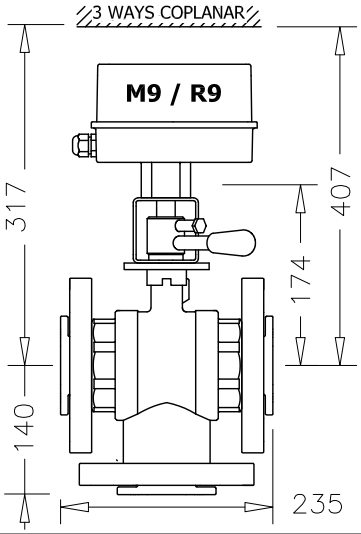

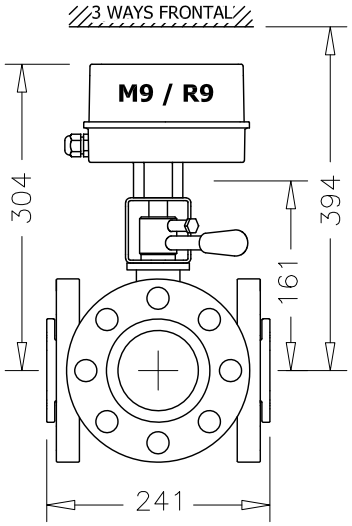

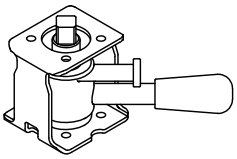

H 70 mm
COD. **DMI54**

LEVER

de pala
Italian OEM Technology

Via del Lavoro, 10
33080 ROVEREDO IN PIANO (PN) - ITALY
Tel. +39 0434 920466 +39 0434 923166 Fax +39 0434 591473
info@depala.it - www.depala.it